DocuSign Envelope ID: FDC55FDA-ED29-449B-A558-5D3CD2BA3515

| PROJECT REFERENCE NO. | SHEET NO. |
|---|---|
| 51214.01AM | 2D-1 |

STATE OF NORTH CAROLINA
DEPT. OF TRANSPORTATION
DIVISION OF HIGHWAYS
RALEIGH, N.C.

ENGLISH DETAIL DRAWING FOR

# PRECAST MANHOLE 7′, 8′ AND 9′ DIAMETER

SHEET 1 OF 1

**840D52**

GENERAL NOTES

USE 4000 PSI MINIMUM COMPRESSIVE STRENGTH CONCRETE.

DESIGN, FABRICATE AND ASSEMBLE PRECAST MANHOLE COMPONENTS IN ACCORDANCE WITH AASHTO M199.

ASSEMBLE RISER AND GRADE RINGS WITH STEPS SPACED 16″ FROM THE TOP TO THE BOTTOM OF THE MANHOLE.

WHERE THE MANHOLE IS EXPOSED TO ROAD TRAFFIC, THE TOP OF THE MANHOLE IS TO BE FLUSH WITH THE GROUND. AT OTHER LOCATIONS IT SHOULD BE A MINIMUM OF 9″ ABOVE THE GROUND.

DEPTH OF FILL LIMITED TO 30′-0″ FROM FINSH GRADE TO TOP OF BOTTOM SLAB.

THE MIN. SLAB THICKNESS ‘T′ SHALL BE THE DIMENSION OF THE THINNEST PORTION OF THE TOP/BOTTOM SLAB.

* TOP MAT OF REINFORCEMENT MAY BE NEGLECTED IF TOP SLAB HAS A DISTINGUISHABLE TOP AND BOTTOM.

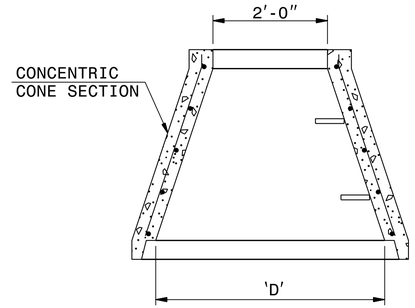


**ALTERNATE CONE SECTION**

| D | W | T | As |
|---|---|---|---|
| INTERNAL DIAMETER (FT.) | MIN. WALL THICKNESS (IN.) | MIN. TOP/BOTTOM SLAB THICKNESS (IN.) | MIN. CIRCUMFERENTIAL AREA OF STEEL PER VERTICAL FT. (SQ. IN.) |
| 7 | 8.0 | 8 | 0.21 |
| 8 | 8.5 | 8 | 0.24 |
| 9 | 9.0 | 9 | 0.27 |

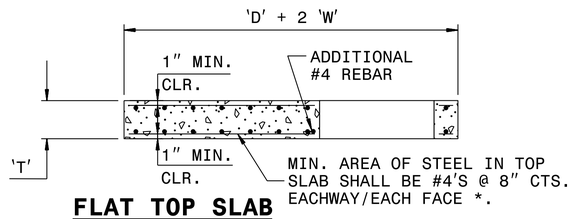


**FLAT TOP SLAB**

| FRAME AND GRATES | STD. NO. |
|---|---|
| TRAFFIC BEARING | 840.37 |
| | |
| NONTRAFFIC BEARING: | 840.16 |
| | 840.20 |
| | 840.22 |
| | 840.24 |
| | 840.29 |

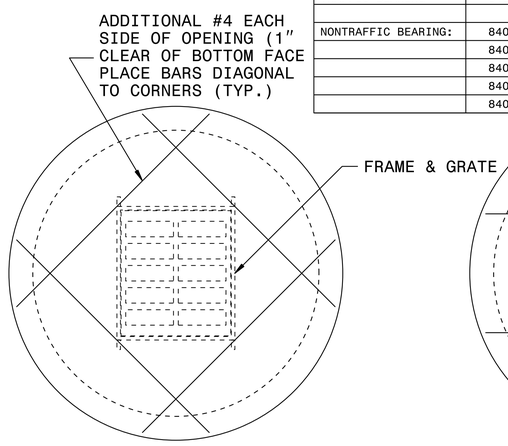


**GRATED INLET OPTION**

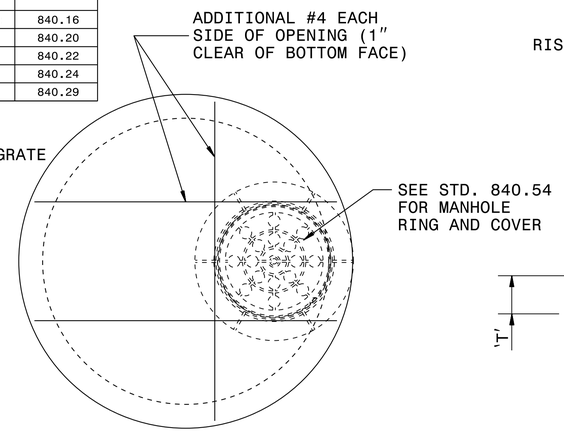


**MANHOLE OPTION**

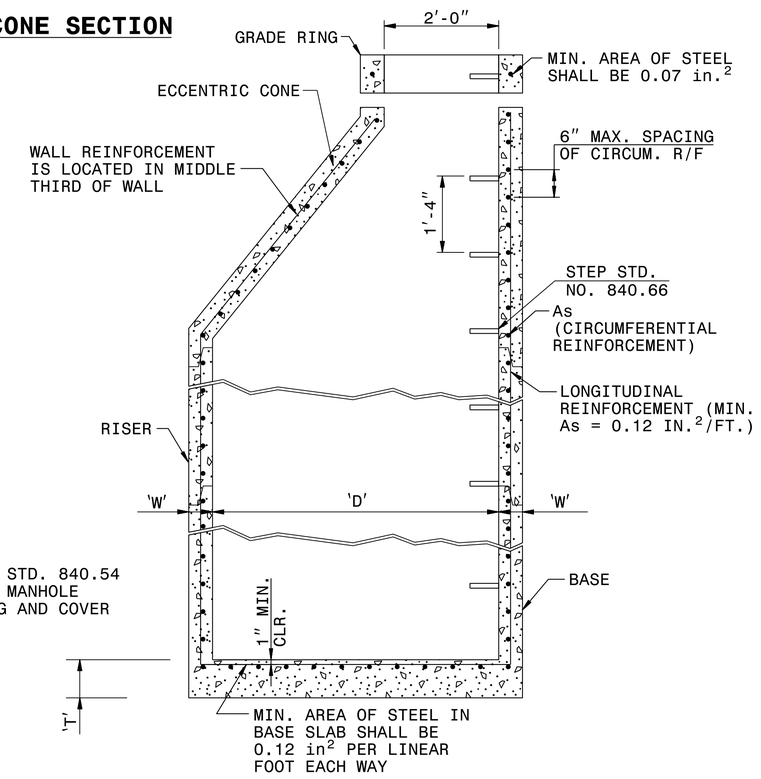


**TYPICAL MANHOLE SECTION**

STATE OF NORTH CAROLINA
DEPT. OF TRANSPORTATION
DIVISION OF HIGHWAYS
RALEIGH, N.C.

ENGLISH DETAIL DRAWING FOR

# PRECAST MANHOLE 7′, 8′ AND 9′ DIAMETER

SHEET OF

**840D52**

DOCUMENT NOT CONSIDERED FINAL UNLESS ALL SIGNATURES COMPLETED

**CONTRACT STANDARDS AND DEVELOPMENT UNIT**
Office 919-707-6950 FAX 919-250-4119

**SEE PLATE FOR TITLE**

ORIGINAL BY: T.S.Spell DATE: 7-17-00
MODIFIED BY: DATE:
CHECKED BY: DATE:
FILE SPEC.: ds174:usr/details/stand/840d52_8&9.dgn

04-MAR-2020 11:11
S:\Contracts\Contracts\Special Details\jhowerton\840d52.8&9.dgn
jhowerton AT CSD-320965